Li-ion Polymer Battery Specification

锂离子聚合物电池规格书

Model 型号	**YDL602225**
Capacity 容量	**250mAh**
Customer Code 客户代码	
Total pages 文件页数	**10**

Registered 编制	Checked 审核	Approved 批准

Customer Approve 客户确认		
Department 部门	Signature 签名	Date 日期
QA Dept 品质		
R&D Dept 研发		
Approved 批准		

Addr.: Luoma Second Bridge, Tiansheng Lake Villager Group, Luoma Village, Qingxi Town, Dongguan, China
地址：中国，广东省东莞市清溪镇罗马村天生湖村民小组罗马二桥

Content

目 录

1. Modified List 修订表 1

2. Scope 适用范围 2

3. Drawing of Cell 电芯尺寸图 2

4. Basic Performance 基本性能 3

5. Electrical Characteristics of the Cell 电芯的电性能 4

6. Drawing of battery pack 成品电池尺寸图 6

7. Pack List 组装清单 7

8. PCB Specification PCB 规格 7

9. Storage and Shipment Requirement 储存及运输要求 9

10. Warning and Cautions 警告及注意事项 9

1. Modified List 修订表

Product Modified Record List

产品变更履历表

Revision 版本	Date 日期	Mark 标记	Modified content 修改内容	Approved by 批准
A0	2026/11/22	/	New Release	

2. Scope 适用范围

This specification describes the basic performance, technical requirement, testing method, warning and caution of the Li-ion polymer rechargeable battery or battery pack. The battery pack defined in this documentation is an assenmbly which include battery, PCB, wire and other parts. This specification only applies to Dongguan Youdalipo New Energy Technology Co., Ltd

本规格书规定了锂离子聚合物可充电电池或者电池组的基本性能、技术要求、测试方法以及注意事项。电池组的定义是包括电芯、保护板、连接线以及其他部件的组合。本规格书只适用于东莞市优达锂新能源科技有限公司所生产的产品。

3. Drawing of Cell 电芯尺寸图

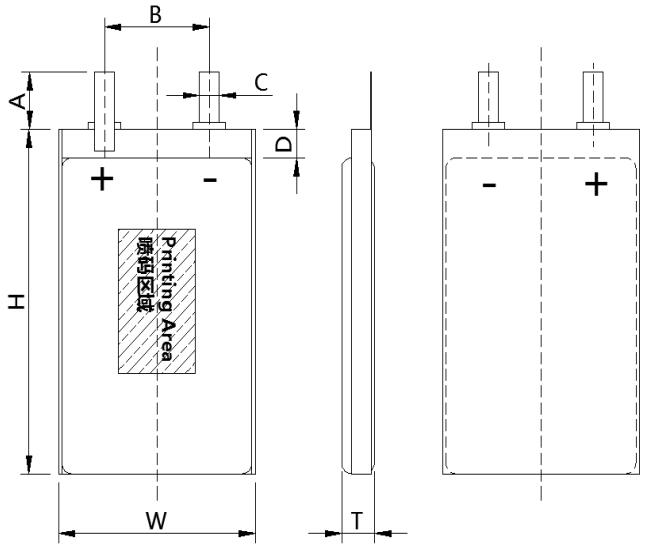

Item 项目	Description 描述		Dimension 尺寸
A	Cell Tab Length 极耳长度		7± 2 mm
B	Cell Tab Pitch 极耳中心距		14.7± 2 mm
C	Cell Tab Width 极耳宽度		6± 0.2 mm
D	Cell Top sealent Length 电池顶封位		4 ± 0.5mm
T	Cell Thickness max. 最大电芯厚度	Initial 初始	5.7mm
		After 300 cycle life 300周循环后	6mm
W	Cell Width max. 最大电芯宽度		22mm
H	Cell Height max. 最大电芯高度		25mm

4. Battery Performance 电池性能

No.	Item 项目	Specification 性能	Note 备注
1	Rated Capacity 额定容量	250 mAh	0.2C discharge 0.2C放电
2	Nominal Capacity 典型容量	260 mAh	0.2C discharge 0.2C放电
3	Min. Capacity 最小容量	240 mAh	0.2C discharge 0.2C放电
4	Battery Weight 电池重量	≈ 5g	
5	Initial Impedance 初始内阻	≤ 40mΩ for Cell ≤ 120mΩ for Pack	3.7V AC 1KHz measured 3.7V电芯 1KHz 交流阻抗测试
6	Normal Voltage 标称电压	3.7 V	
7	Initial Voltage 出厂电压	≥3.8V	
8	Limited Charge Voltage 充电限制电压	4.2 V	Voltage of CC charge to CV charge 恒流充电转恒压充电的电压
9	Standard Charging Method 标准充电方法	0.2C CC current charge to 4.2V, then CV charge till current declines to 0.01C 0.2C恒流充电至4.2V，后恒压充电直到电流小于0.01C	
10	Cut-off Voltage 终止电压	2.75 V	PCM Over-discharge Protection Voltage:3.0V 保护板过放保护电压：3.0V
11	Standard Charging Current 标准充电电流	50mA (0.2C)	CC charge to 4.2 V, then CV charge till current declines to less than 0.01C 恒流充电到4.2 V，转恒压充电直到电流小于0.01C
12	Standard Charging Time 标准充电时间	5 hours	
13	Rapid Charging Current 快速充电电流	125mA (0.5C)	
14	Rapid Charging Time 快速充电时间	2 hours	
15	Standard Discharging Current 标准放电电流	50mA (0.2C)	CC discharge to 2.75 V 恒流放电至2.75 V
16	Max. Discharging Current 最大持续放电电流	125mA (0.5C)	
17	Operating Temperature Range 工作温度范围	Charging：10～45℃ Discharging：-10 ～60℃	
18	Operating humidity Range 工作环境	≤ 90%RH	

5. Electrical Characteristics of the Cell 电芯的电性能

5.1 Normal Test Conditions 标准测试条件

Temperature 温度	Relative Humidity 相对湿度	Atmospheric Pressure 大气压强
15 ~ 35 ℃	45 ~ 85 % RH	86 ~ 106 KPa

5.2 Electrochemical Characteristics 电化学特性

No.	Item 项目	Criterion 性能标准	Test Method 测试方法
1	0.2C dischargring capacity 0.2C放电容量	Discharging capacity is not less than normal capacity 放电容量应不小于标称容量	After Standard Charging，rest 5 minutes，then 0.2C discharge to cut-off voltage 标准充电后，搁置5分钟，再0.2C放电至终止电压
2	1.0C dischargring capacity 1.0C放电容量	Discharging capacity is not less than 90% of normal capacity 放电容量应不小于标称容量的90%	After Standard Charging，rest 5 minutes，then 1.0C discharge to cut-off voltage 标准充电后，搁置5分钟，再1.0C放电至终止电压
3	Cycle life 循环寿命	The cycle times is not less than 300 循环次数不小于300次	Charge：0.2C CC-CV charge to 4.2 V, then current declines to 0.02C Discharge：0.2C CC discharge to 2.75 V When the discharge capacity reduced to 80% of rated capacity, stop testing, and record the cycle times. 充电：0.2C恒流恒压充电到4.2 V,电流降至0.02C， 放电：0.2C恒流放电到2.75 V 当放电容量低于额定容量的80%时，停止测试，记录循环次数。
4	Self-discharge 自放电	Discharging capacity is not less than 85% of initial capacity 放电容量应不低于初始容量的85%	After Standard Charging，rest the cell for 28 days in the condition of 20±5℃, then 0.2C discharge to cut-off voltage, and record the capacity. 标准充电后，在20±5℃条件下搁置28天，再0.2C放电至终止电压，并记录容量。

5.3 Environment Characteristics 环境性能

No.	Item 项目	Criterion 性能标准	Test Method 测试方法
1	Constant temperature and constant humidity test 恒定湿热	No explosion, no fire, no leakage, Discharing capacity is not less than 60% of initial capacity 不爆炸，不起火，不泄漏，放电容量不低于初始容量的60%	After Standard Charging, rest the cell for 48 hours in the conditions of 40±5℃ and 90~95%RH, then 1.0C discharge to cut-off voltage, and record the capacity. 标准充电后，在 40±5℃和90~95%RH条件下搁置48小时，再1.0C恒流放电至终止电压，并记录容量。
2	Vibration test 振动	No explosion, no fire, no leakage. 不爆炸，不起火，不泄漏	After Standard Charging, fixed the cell to vibration table, then subjected to vibration test for 30 minutes per axis of XYZ axes. Frequency rate: 1oct/min Vibration frequency: 10Hz~30Hz

			Excursion(single amplitude): 0.38mm Vibration frequency: 30Hz~55Hz Excursion(single amplitude): 0.19mm 标准充电后，将电芯固定在振动台上，然后沿XYZ每个坐标方向振动30分钟。 扫频速率：1 oct/min 振动频率：10Hz~30Hz 位移幅值（单振幅）：0.38mm 振动频率：30Hz~55Hz 位移幅值（单振幅）：0.19mm
3	Shock test 碰撞	No explosion, no fire, no leakage. 不爆炸，不起火，不泄漏	After Standard Charging, test condition: Acceleration: 100m/s2 Pulse lasting time: <16ms Shock times: 1000±10 times 标准充电后，测试条件如下: 加速度：100m/s2 脉冲持续时间：<16ms 碰撞次数：1000±10次

5.4 Safety Characteristics 安全性能

No.	Item 项目	Criterion 性能标准	Test Method 测试方法
1	Overcharge test 过充电	No explosion, no fire 不爆炸，不起火	Dsicharge：1.0C to 2.75V Charge：1.0C last for 2.5H 放电：1.0C放电至2.75V 充电：1.0C充电2.5H
2	Short-circuit test 短路	No explosion, no fire 不爆炸，不起火	After Standard Charging, Short circuit the positive and negative tabs with the copper wire,and the resisitance of it is not more than 80mΩ, When the temperature falls 10℃ lower than the peak, Stop testing. 标准充电后，使用内阻不大于80mΩ的铜导线短路正负极耳，当电芯温度下降到比峰值低约10℃时，结束实验。
3	Thermal test 热冲击	No explosion, no fire 不爆炸，不起火	After Standard Charging, put cell into an hot box, test condition: Temperature Rate：5±2℃/min Ending temperature：130±2℃ Keep temperature for 30 minutes, Then stop testing 标准充电后，将电芯放置在热箱中，测试条件如下: 升温速率：5±2℃/分钟 终止温度：130±2℃ 保持此温度30min，然后停止测试。
Note: Above testing of sage characteristics must be with protective equipment. 备注：以上安全性能测试应在有保护措施的条件下进行。			

6. Drawing of battery pack 成品电池尺寸图

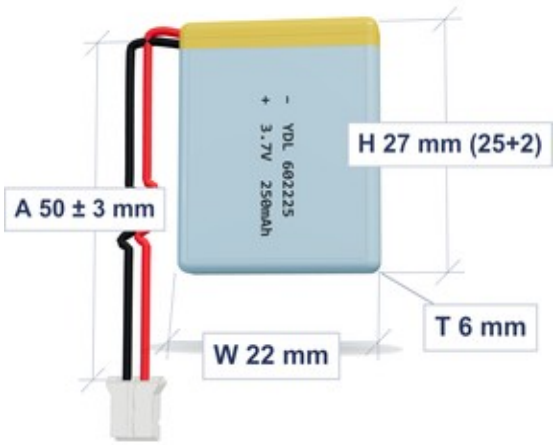

Item 项目	Description 描述	Dimension 尺寸
T	Battery pack Thickness max. 最大电池厚度	6mm
W	Battery pack Width max. 最大电池组宽度	22mm
H	Battery pack Height max. 最大电池组高度	27mm
A	Wire Length 导线长度	50± 3mm
Pack Impedance 电池组内阻		≤ 120mΩ
Pack Weight 电池组重量		8g

7. Pack List 组装清单

No.	Item	Quantity	Material	Specification
1	Li-ion polymer cell	1	602225	250mAh
2	PCB	1	Fiber glass polymer compound circuit board	Pass RoHS
3	wire	2	Polythene and copper	UL 1007 28AWG
4	connector	1	JST PHR-2	2P

8. PCB Specification PCB 规格

8.1 Electrical Characteristics 电性能

No.	**Item** **项目**	**Min** **最小值**	**Typ** **典型值**	**Max** **最大值**	**Unit** **单位**
1	Over-charge Protection Voltage 过充保护电压	4.230	4.280	4.330	V
2	Over-charge Release Voltage 过充释放电压	4.030	4.080	4.130	V
3	Over-charge Protection Delay Time 过充保护延迟时间		120	200	ms
4	Over-discharge Protection Voltage 过放保护电压	2.300	2.400	2.500	V
5	Over-discharge Release Voltage 过放释放电压	2.900	3.000	3.100	V
6	Over-discharge Protection Delay Time 过放保护延迟时间		80	120	ms
7	Over-current Protection for Discharge 过流保护电流	5	6.5	9	A
8	Over-current ProtectionDelay Time 过流保护延迟时间		9	20	ms
9	Internal Resistance 正常工作时导通内阻	/	/	65	mΩ
10	Operation Static Current 工作状态消耗电流	1.0		7.0	μA
11	Current consumption（Power down） 过放状态下静态电流	/	/	1	μA
12	Short Circuit Protection Delay Time 短路保护延迟时间		400	600	μs

8.2 Pin Explanation 焊盘说明

Symbol 符号	Explanation 说明	Symbol 符号	Explanation 说明
P+	Battery output/charging positive pole 连接电池输出/充电输入的正极端	B+	Cell positive pole 连接电芯正极
P-	Battery output/charging negative pole 连接电池输出/充电输入的负极端	B-	Cell negative pole 连接电芯负极

8.3 Circuit Diagram 电路图

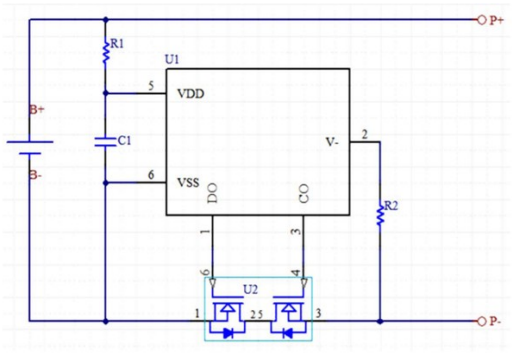

单六角

8.4 PCB Parts List 保护板主要元件清单

No.	Location 元件编号	Part Name 元件名称	Specification 元件规格	Pack Type 封装式	Quantity 数量	Maker/Remark 厂商/备注
1	U1	Battery protection IC	DPDW01	SOT23-6	1	
2	U2	Silicon MOSFET	DP8205	TSSOP-8	1	
3	R1	Resistor 电阻	100Ω±5%	0603	1	
4	R2	Resistor 电阻	1KΩ±5%	0603	1	
5	C1	Capacitor 电容	0.1μF	0603	1	
6	PCB	Print circuit board 印刷电路底板	/	/	1	/

9. Storage and Shipment Requirement 储存及运输要求

Item 项目	Storage environment 储存环境	Requirement 要求
	Short period less than 1 month 短期少于1个月	-20℃～+45℃，90% RH Max.
	Long period more than 3 months 长期超过3个月	-10℃～+45℃，90% RH Max.
	Recommend storage 推荐储存	15℃～35℃，85% RH Max.

Long time storage:
If the cell is stored for a long time, the cell's storage voltage should be 3.6~3.9V and the cell is to be stored in a condition as No.4.1. Also, it is recommended to charge the cell every six months.
长时间储存:
如果电芯需要长时间储存，请将电芯电压保持在3.6～3.9V之间，且按照5.1所描述的条件下进行储存，同时建议每个六个月对电池进行一次充电。

10. Warning and Cautions 警告及注意事项

10.1 Warning 警告

Danger warning(it should be described in manual or instruction for users, indicated especially) to prevent the possibility of the battery from leaking, heating, explosion. Please observe the following precautions:
危险警告：（应在使用说明手册或说明书中，特别注明）为防止电池可能发生泄漏，发热，爆炸，请注意以下预防措施:

- Don't immerse the battery in water and seawater. Please put it in cool and dry environment if no using
  严禁将电池浸入海水或水中，保存不用时，应放置在阴凉干燥的环境中
- Do not discard or leave the battery near a heat source as fire or heater
  禁止将电池在热高温源（如火、加热器）等旁使用、留置或丢入
- Being charged, using the battery charger specifically for that purpose
  充电时请选用锂离子电池专用充电器
- Don't reverse the positive and negative terminals
  严禁颠倒正负极使用电池
- Don't connect the battery to an electrical outlet directly
  严禁将电池直接接入电源插座
- Don't connect the positive and negative terminal directly with metal objects such as wire. Short terminals of battery is strictly prohibited, it may damage battery
  禁止用金属直接连接电池正负极短路，任何时候禁止短路电芯，它会导致电芯严重损坏
- Do not transport and store the battery together with metal objects such as necklaces, hairpins
  禁止将电池与金属，如发夹、项链等一起运输或贮存
- Do not strike, throw or trample the battery
  禁止敲击或抛掷，踩踏电池
- Do not directly solder the battery and pierce the battery with a nail or other sharp object
  禁止直接焊接电池和用钉子或其它利器刺穿电池
- Do not use it with other different battery, or other different lithium polymer battery model in mxture
  禁止与其他电池或者不同型号的聚合物锂离子电池混合使用

- Prohibition of use of damaged cells

  禁止使用已经损坏的电芯

- Don't bend or fold sealing edge. Don't open or deform folding edge. Don't fillet the end of the folding edge

  禁止弯折顶封边，禁止打开或破坏折边，禁止倒折电芯折边底部

- Don't fall, hit, bend battery body

  禁止坠落、冲击、弯折电芯

- Battery pack designing and packing Prohibition injury batteries

  电池外壳设计和包装禁止损伤电池

- Never disassemble the cells

  在任何情况下不得拆卸电芯

- The battery replacement shall be done only by either cells supplier or device supplier and never be done by the user

  更换电芯应由电芯供应商或者设备供应商完成，用户不得自行更换

- Keep the battery away from babies

  电池应远离小孩

- Any components contacting these two edges, they must be insulated

  导电元件与电池两侧封边接触必须绝缘

10.2 Cautions 注意事项

- Do not use or leave the battery at very high temperature conditions(for example, strong direct sunlight or a vehicle in extremely hot conditions). Otherwise, it can overheat or fire or its performance will be degenerated and its service life will be decreased

  禁止在高温下(阳光直射处或很热的汽车中)使用或放置电池，否则可能会引起电池过热、起火或功能失效，寿命减短

- Do not use it in a location where is electrostatic and magentic greatly, otherwise, the safety devices may be damaged, causing hidden trouble of safety

  禁止在强静电和强磁场的地方使用，否则易破坏电池安全保护装置，带来不安全的隐患

- If the battery leaks, and the electrolyte get into the eyes. Do not wipe eyes, instead, rinse the eyes with clean water, and immediately seek medical attention. Otherwise, eyes injury can result.

  如果电池发生泄漏，电解液进入眼睛，请不要揉擦，应用清水冲洗眼睛，并立即送医治疗，否则会伤害眼睛

- If the battery gives off an odor, generates heat, becomes discolored or deformed, or in any way appear abnormal during use, recharging or storage, immediately remove it from the device or battery charger and stop using it

  如果电池发出异味、发热、变色、变形或使用、贮存、充电过程中出现任何异常现象，立即将电池从装置或充电器中移除并停用

- In case the battery terminals are dirt, clean the terminals with a dry cloth before use. Otherwise power failure or charge failure may occur due to the poor connection with the instrument

  如果电池极耳弄脏，使用前应用干布抹净，否则可能会导致接触不良功能失效

- Be aware discharged batteries may cause fire, tape the terminals to insulate them

  废弃电池应用绝缘纸包住电极，以防止起火。